GIISAMEX

EVOLUTION

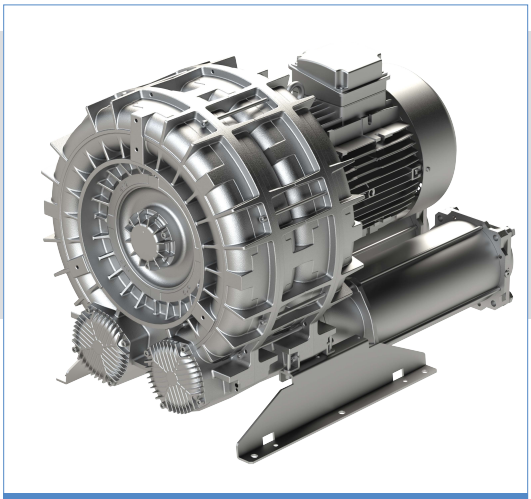

e10-TS

Evolution Series Technical Characteristics

- Premium efficient motor
- High efficiency impeller
- Mountable in any position
- Maintenance free operation
- TEFC (IP55)

Optional Features

- Anodized aluminum components for corrosion resistance
- Increased sealing

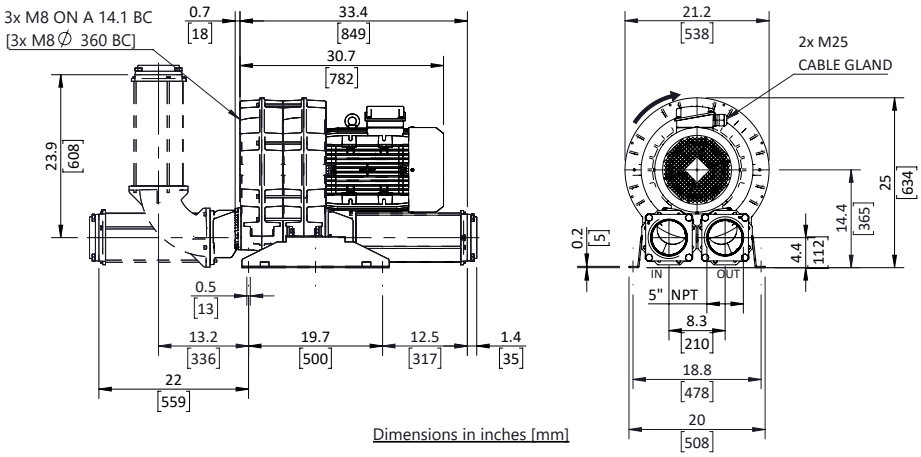

Dimensions in inches [mm]

Technical Specifications

Model No.	HP	Hz	Open Flow (cfm)	Max Pressure in. H_2O	Max Vacuum in. H_2O	Efficiency	Voltage	FLA	Starting Current Ratio[1]	dB(A)[2]	Weight (lb)
SCL e10-TS-20-3	20	60	1122	50	80	91.0%	208-230/460	48.8 / 24.4	10.7	85	359.4
		50	929	80	90	91.9%	200/400	54.4 / 27.2		82	
SCL e10-TS-25-3	25	60	1122	70	80	91.7%	208-230/460	62 / 31	12.5	85	443.1
		50	929	100	100	92.4%	200/400	69 / 34.5		82	
SCL e10-TS-25-3-575	25	60	1122	70	80	91.7%	575	24.8	10.6	84	443.1

Motors include normally closed thermal protector, 1.15 S.F. (60 Hz), tropicalized windings, Class F (B) insulation, and are suitable for use with a VFD (Contact FPZ for pneumatic and speed limits when used with a VFD).

[1]Starting current ratio x fla = starting current
[2]Noise level measured at a distance of 1 m with inlet and outlet ports piped in accordance to ISO 3744

Data is subject to change without notice.

Recommended Accessories

Description	Pressure Safety Valve	Vacuum Safety Valve	Pressure Filter	Vacuum Filter	Check Valve
Part number	(2)VRL9(20HP)&VRL9(25HP)[3]	(2)VRL9(20HP)&VRL9(25HP)[3]	FL10	CT-275P-500C	CV5-502M-1330

[3]Valve selections are based on 60 Hz and standard air. Valves are supplied uncalibrated. Safety valves are easy to calibrate, but can be ordered with factory calibration.

PRESSURE

VACUUM

CAPACITY

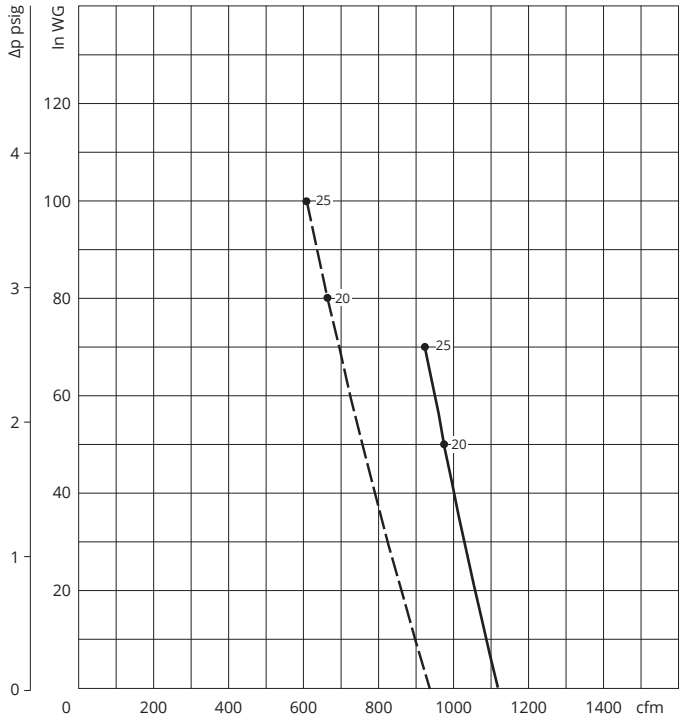

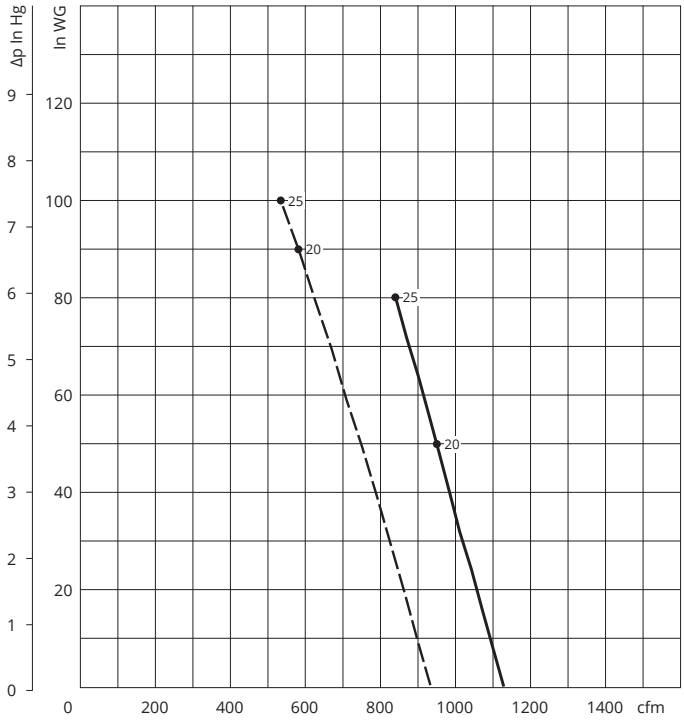

ABSORBED POWER

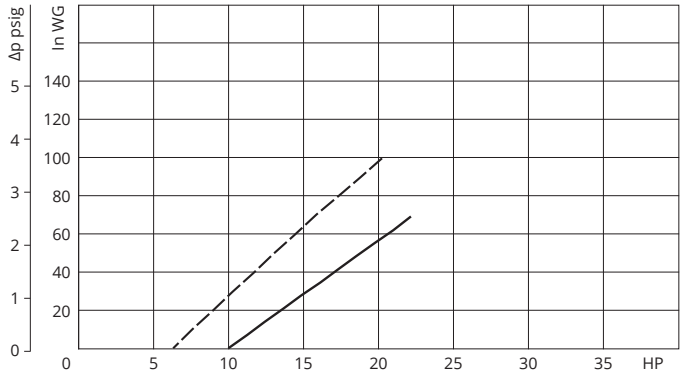

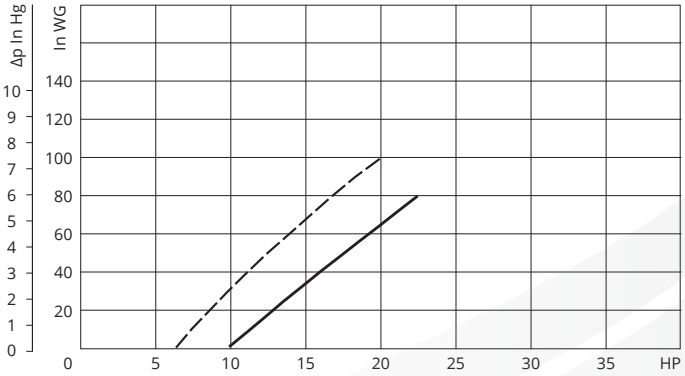

TEMPERATURE INCREASE

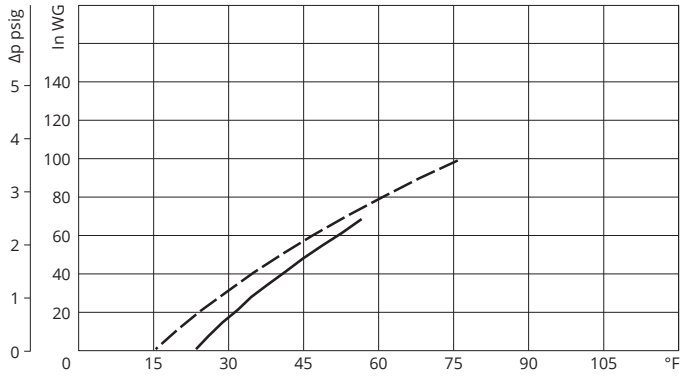

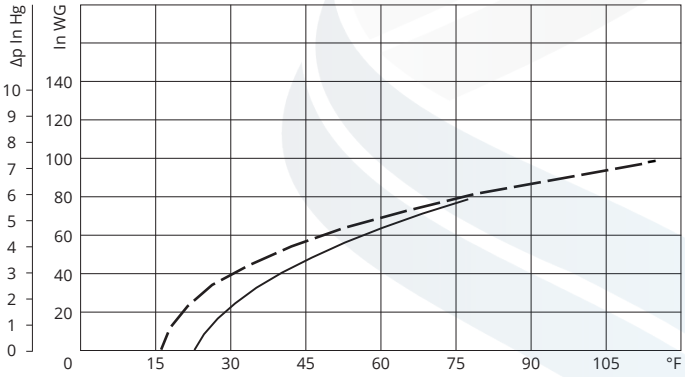

Curves refer to air at 68°F temperature and 29.92 In Hg atmospheric pressure (abs) measured at inlet port.
Values for flow, power consumption and temperature rise: +/-10% tolerance.
Data subject to change without notice.

KEY
– – – 50 Hz
—— 60 Hz