GIISAMEX

Tuthill

M-D Pneumatics™
Rotary Positive Displacement Blowers

PD Plus

Model 7000 Heavy Duty

Bi-directional Rotation
Series Options:
Horizontal Air Flow
Vertical Air Flow
Horizontal Flow, Single Envelope Gas Service
Vertical Flow, Single Envelope Gas Service
Horizontal Flow, Double Envelope Gas Service
Vertical Flow, Double Envelope Gas Service

Model 7000 PD PLUS heavy duty industrial blowers are designed for high performance applications, up to 18 PSIG pressure boost or 17" Hg dry vacuum (24" Hg water injected).

Vertical & Horizontal Air Flow

This series has wide application in pneumatic conveying, wastewater treatment, and the general process industry where high pressure, high volume air is required. Seal areas are vented to atmosphere to relieve process pressure against the internal lip seals, and to provide oil-free air.

Vertical & Horizontal Single Envelope Gas Service

This series is utilized in such applications as closed loop pneumatic conveying, fuel or process gas handling, or elevated pressure applications up to 100 PSIG discharge. Vent openings are tapped and plugged to prevent gas leakage. These fittings can also accept an inert gas purge for positive containment of the process gas.

Vertical & Horizontal Double Envelope Gas Service

This series is built to laboratory standards where virtually complete sealing is required. In addition to the features shown on the single envelope series, the drive shaft is mechanically sealed and the oil sumps are plugged to provide an even higher degree of leakage protection.

Optional Cooling Coils

7000 PD PLUS models can include cooling coils to provide cooling of lubricating oil with less than 1 GPM cooling water for high performance applications where external lubrication is not desired or practical.

Flexibility by Design

Detachable mounting feet allow field conversion from horizontal to vertical flow, or vice versa without additional components.

Maximum Efficiency

Model 7000 PD PLUS models include extended tip rotor profile for increased displacement and operating efficiency versus any other blower in its class.

Extra Capacity Oil Sumps

Oversized end covers for the largest oil capacity of any blower in its class. End covers also include external ribbing for applications where cooling water is not available. Oil drain plugs are O-ring sealed for protection against leakage.

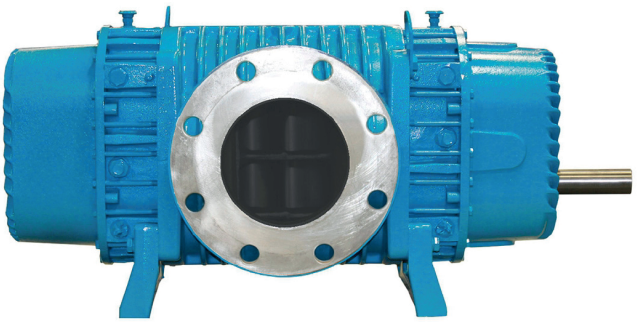

Model Size	Max. Press. PSI	Max. Vac. (in. Hg)	Nominal Min. RPM @ Max. Disch. Press.	Nominal Max. RPM @ Max. Disch. Press.	Displ. CFR
7010	18	17	1700	3000	.593
7013	18	17	1650	3000	.752
7017	15	15	1150	3000	.983
7021	15	15	1150	3000	1.214
7026	12	15	1150	3000	1.503

Material Specifications:

Housing: Cast iron
End Plates: Cast iron
End Covers: Cast iron
Rotors: Ductile iron
Shafts: Ductile iron cast integrally with rotor
Bearings: Rotors - Double row ball
Drive shaft - Cylindrical roller
Drive Shaft: SAE 4140 forged alloy steel
Gears: Heat treated alloy steel, helical cut
Seals: Standard - Lip and labyrinth type on rotor shafts; lip seal on the drive shaft
Single Envelope Gas Service - Mechanical and labyrinth type on rotor shafts; lip seal on drive shaft
Double Envelope Gas Service - Same as Single Envelope series plus mechanical sealing on drive shaft
Lubrication: Oil splash system, both ends

For elevated pressure applications, single and double envelope gas service series are available with high pressure sealing and testing to allow discharge pressures as high as 100 PSIG (18 PSI nominal maximum pressure boost)*

* Blowers operating with a discharge pressure above 20 PSIG require mechanical rotor shaft sealing; above 25 PSIG requires hydrostatic testing and special high pressure seal leakage testing.

Optional Lubrication Systems

All 7000 PD PLUS models are available with integral pressure lubrication to provide positive bearing lubrication and filtration of lubricant for extreme applications. Optional lubrication can be specified.

Special Materials

Ductile Iron*
Stainless Steel**
Carbon Steel***

Special Coatings

Bi-Protec® (Nickel/Armoloy®)

*7010, 7017, 7021 & 7026 only
**7013 & 7017 only, ***7013 only

GIISAMEX

Performance Tables

In conjunction with our program of continuous testing and design upgrading, all specifications are subject to change without notice.
All data are approximate. Request a quotation for your specific application.

Pressure (14.70 PSIA and 70° F Inlet)

BLOWER MODEL	SPEED	2 PSIG		5 PSIG		8 PSIG		10 PSIG		12 PSIG		15 PSIG		18 PSIG		Max. Vacuum		
	(RPM)	CFM	BHP	CFM	BHP	CFM	BHP	CFM	BHP	CFM	BHP	CFM	BHP	CFM	BHP	" Hg	CFM	BHP
7010	1200	586	8.5	513	18	460	27	430	33	403	40	367	49			15	370	25
	1750	912	13	839	26	786	40	756	49	730	58	693	71	660	85	16	672	39
	2400	1297	17	1224	36	1172	54	1142	67	1115	79	1079	98	1046	116	17	1032	57
	3000	1653	21	1580	45	1527	68	1498	83	1471	99	1434	122	1402	145	17	1388	71
7013	1200	749	10	660	22	596	34	560	42	527	50	483	61			15	486	31
	1750	1163	15	1074	32	1010	49	974	61	941	72	897	89	857	107	16	871	49
	2400	1652	20	1563	44	1499	68	1462	83	1430	99	1385	123	1345	146	17	1329	70
	3000	2103	26	2014	55	1950	85	1914	104	1881	124	1837	153	1797	183	17	1780	88
7017	1200	985	13	872	28	790	44	744	54	703	64	647	79			15	651	40
	1750	1526	18	1413	41	1331	63	1285	78	1244	93	1187	116			16	1155	62
	2400	2165	25	2051	56	1970	87	1924	108	1882	128	1826	159			17	1754	91
	3000	2754	32	2641	70	2560	109	2514	134	2472	160	2416	199			17	2344	113
7021	1200	1225	15	1090	34	993	53	939	66	889	79	822	98			15	827	49
	1750	1893	22	1758	50	1661	78	1606	96	1557	115	1490	142			15	1495	72
	2400	2682	30	2547	68	2450	106	2395	132	2346	157	2279	195			15	2284	98
	3000	3410	38	3276	85	3178	133	3124	165	3074	196	3007	244			15	3012	123
7026	1200	1527	18	1367	42	1251	65	1186	81	1127	97					14	1101	56
	1750	2354	26	2193	61	2078	95	2012	118	1953	141					15	1879	88
	2400	3331	36	3170	83	3055	131	2989	162	2930	193					15	2856	121
	3000	4233	45	4072	104	3956	163	3891	202	3832	242					15	3758	151

Dimensions

Horizontal Flow

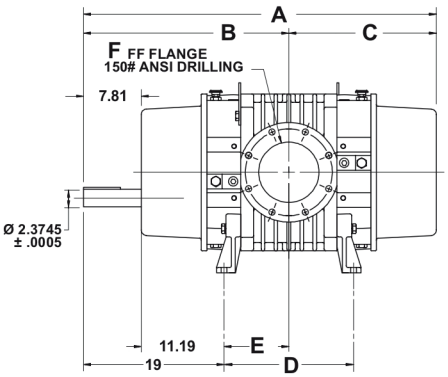

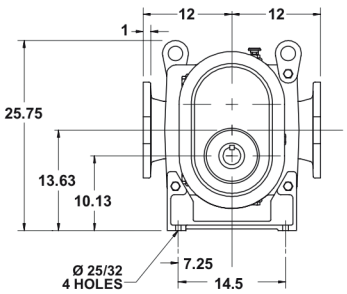

Vertical Flow

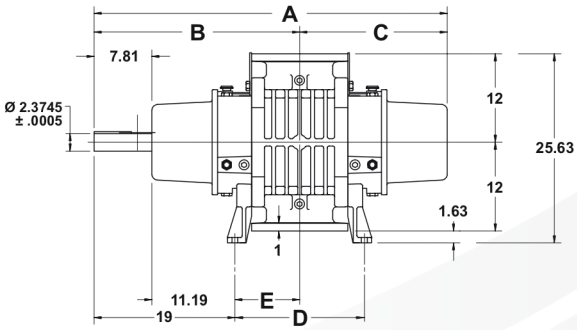

MODEL	A	B	C	D	E	F	NET WT. (lbs.)*
7010	44.94	26.38	18.56	14.75	7.38	6 FLG	1125
7013	47.69	27.75	19.94	17.50	8.75	8 FLG	1230
7017	51.69	29.75	21.94	21.50	10.75	10 FLG	1365
7021	55.69	31.75	23.94	25.50	12.75	12 FLG	1525
7026	60.69	34.75	26.44	30.50	15.25	12 FLG	1690

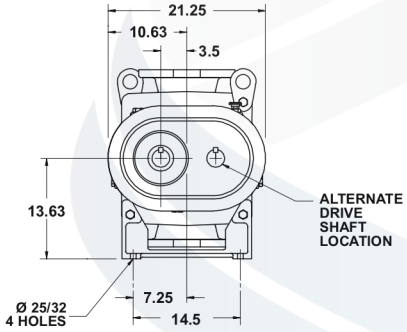

Values are approximate and should not be used for construction.
Certain dimensions for double envelope gas-service differ slightly from those shown above.
Certified prints are available through your local Tuthill Springfield Sales Professional.

*Approximate shipping weight.

giisamex.mx
(55) 53 88 29 15
(55) 53 88 76 43
(55) 53 69 19 18
Av. Antonio Valeriano 305-B, Aldana, Azcapotzalco, Ciudad de México.